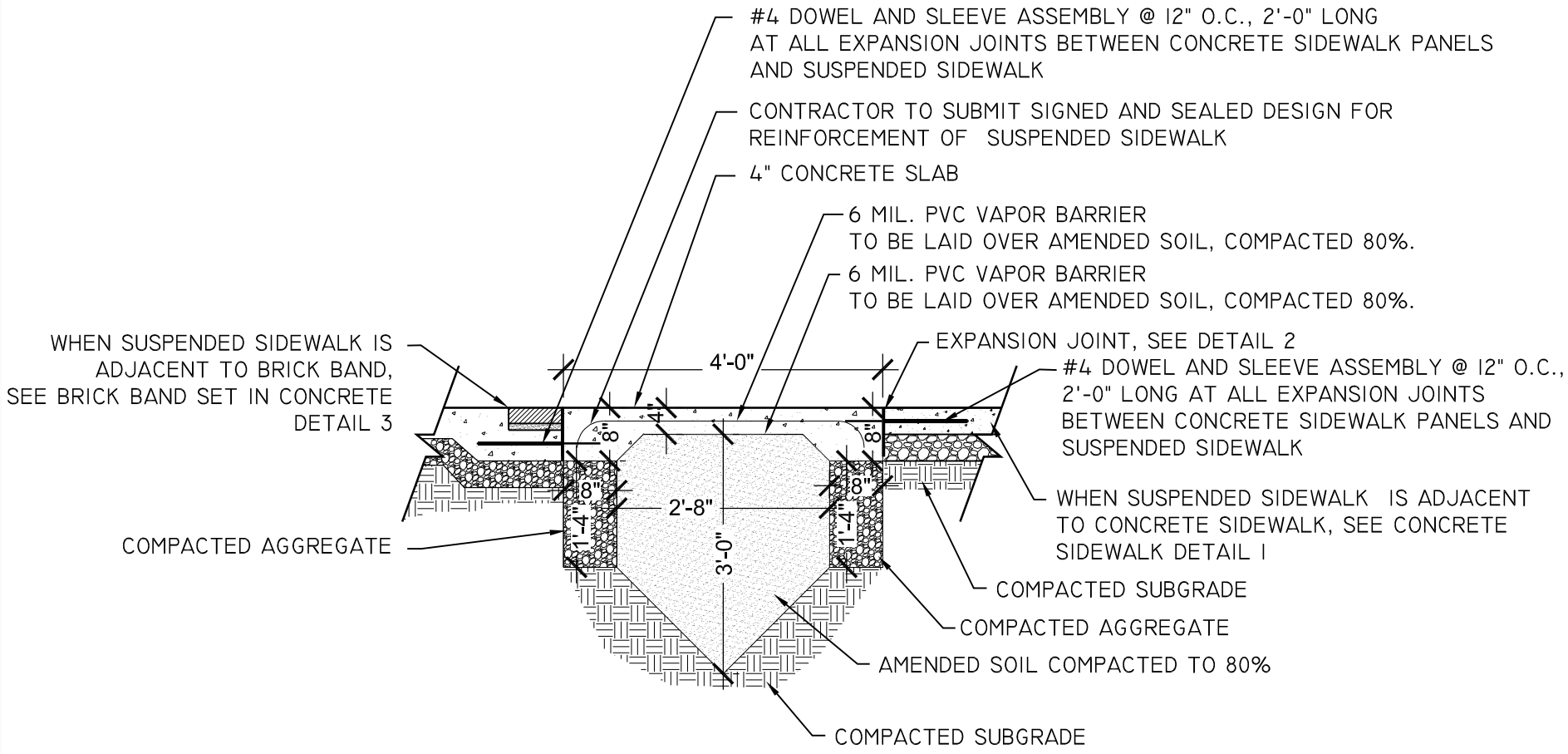

X
LXX.X

SUSPENDED SIDEWALK

SECTION
329000.12 (2026)

NOT TO SCALE

ARLINGTON
VIRGINIA